12-Inch Palmer-Bowlus Flume Discharge Table

85% Submergence Transition

Formulas (H in feet): CFS = 3.31 $H_{ft.}^{1.9}$ GPM = 1485 $H_{ft.}^{1.9}$ MGD = 2.14 $H_{ft.}^{1.9}$

Formulas (H in meters): L/S = 922.75 $H_m^{1.9}$ M3/HR = 3214 $H_m^{1.9}$

FEET	INCHES	METERS	CFS	GPM	MGD	L/S	M3/HR
0.01	0.12	0.0030	Excessive error due to fluid-flow properties and boundary conditions				
0.02	0.24	0.0061					
0.03	0.36	0.0091					
0.04	0.48	0.0122					
0.05	0.60	0.0152					
0.06	0.72	0.0183					
0.07	0.84	0.0213					
0.08	0.96	0.0244					
0.09	1.08	0.0274					
0.10	1.20	0.0305					
0.11	1.32	0.0335					
0.12	1.44	0.0366	0.0695	31.19	0.0449	1.968	7.082
0.13	1.56	0.0396	0.0795	35.68	0.0514	2.251	8.101
0.14	1.68	0.0427	0.0900	40.39	0.0582	2.549	9.171
0.15	1.80	0.0457	0.1011	45.37	0.0653	2.863	10.30
0.16	1.92	0.0488	0.1127	50.58	0.0728	3.192	11.48
0.17	2.04	0.0518	0.1249	56.06	0.0807	3.537	12.73
0.18	2.16	0.0549	0.1376	61.75	0.0889	3.897	14.02
0.19	2.28	0.0579	0.1509	67.72	0.0975	4.273	15.38
0.20	2.40	0.0610	0.1646	73.87	0.1064	4.661	16.77
0.21	2.52	0.0640	0.1790	80.34	0.1157	5.069	18.24
0.22	2.64	0.0671	0.1938	86.98	0.1253	5.488	19.75
0.23	2.76	0.0701	0.2092	93.89	0.1352	5.925	21.32
0.24	2.88	0.0732	0.2252	101.1	0.1455	6.378	22.95
0.25	3.00	0.0762	0.2417	108.5	0.1562	6.845	24.63
0.26	3.12	0.0792	0.2588	116.1	0.1673	7.329	26.37
0.27	3.24	0.0823	0.2765	124.1	0.1787	7.830	28.18
0.28	3.36	0.0853	0.2947	132.3	0.1905	8.346	30.03
0.29	3.48	0.0884	0.3135	140.7	0.2026	8.878	31.95
0.30	3.60	0.0914	0.3330	149.5	0.2152	9.431	33.93

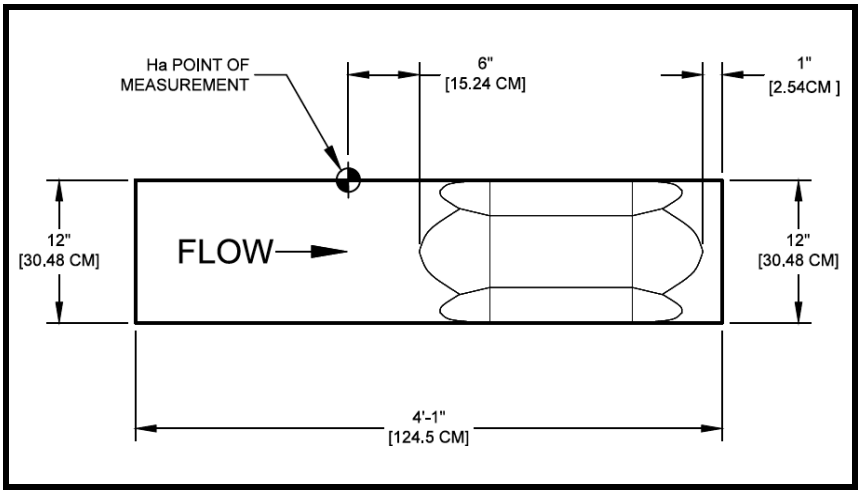

Note: Formulas fit data within 1% of full scale

Sources: Isco Open Channel Flow Measurement Handbook, 6th Edition

12-Inch Palmer-Bowlus Flume Discharge Table

85% Submergence Transition

Formulas (H in feet): CFS = 3.31 $H_{ft.}^{1.9}$ GPM = 1485 $H_{ft.}^{1.9}$ MGD = 2.14 $H_{ft.}^{1.9}$

Formulas (H in meters): L/S = 922.75 $H_m^{1.9}$ M3/HR = 3214 $H_m^{1.9}$

FEET	INCHES	METERS	CFS	GPM	MGD	L/S	M3/HR
0.31	3.72	0.0945	0.3531	158.5	0.2282	10.00	35.98
0.32	3.84	0.0975	0.3738	167.8	0.2416	10.59	38.09
0.33	3.96	0.1006	0.3951	177.3	0.2554	11.19	40.26
0.34	4.08	0.1036	0.4171	187.2	0.2696	11.81	42.50
0.35	4.20	0.1067	0.4398	197.4	0.2842	12.46	44.82
0.36	4.32	0.1097	0.4631	207.8	0.2993	13.11	47.19
0.37	4.44	0.1128	0.4871	218.6	0.3148	13.79	49.64
0.38	4.56	0.1158	0.5119	229.7	0.3308	14.50	52.16
0.39	4.68	0.1189	0.5374	241.2	0.3473	15.22	54.76
0.40	4.80	0.1219	0.5635	252.9	0.3642	15.96	57.42
0.41	4.92	0.1250	0.5905	265.0	0.3816	16.72	60.17
0.42	5.04	0.1280	0.6181	277.4	0.3995	17.50	62.98
0.43	5.16	0.1311	0.6466	290.2	0.4179	18.31	65.89
0.44	5.28	0.1341	0.6757	303.3	0.4367	19.14	68.85
0.45	5.40	0.1372	0.7057	316.7	0.4561	19.99	71.91
0.46	5.52	0.1402	0.7364	330.5	0.4759	20.85	75.04
0.47	5.64	0.1433	0.7679	344.6	0.4963	21.75	78.25
0.48	5.76	0.1463	0.8001	359.1	0.5171	22.66	81.53
0.49	5.88	0.1494	0.8331	373.9	0.5384	23.59	84.89
0.50	6.00	0.1524	0.8669	389.1	0.5603	24.55	88.34
0.51	6.12	0.1554	0.9014	404.5	0.5826	25.53	91.85
0.52	6.24	0.1585	0.9366	420.3	0.6053	26.52	95.44
0.53	6.36	0.1615	0.9726	436.5	0.6286	27.54	99.11
0.54	6.48	0.1646	1.009	452.8	0.6521	28.57	102.8
0.55	6.60	0.1676	1.047	469.9	0.6767	29.65	106.7
0.56	6.72	0.1707	1.085	486.9	0.7012	30.73	110.6
0.57	6.84	0.1737	1.124	504.5	0.7264	31.83	114.5
0.58	6.96	0.1768	1.163	522.0	0.7516	32.94	118.5
0.59	7.08	0.1798	1.203	539.9	0.7775	34.07	122.6
0.60	7.20	0.1829	1.244	558.3	0.8040	35.23	126.8
0.61	7.32	0.1859	1.285	576.7	0.8305	36.39	130.9
0.62	7.44	0.1890	1.327	595.6	0.8576	37.58	135.2
0.63	7.56	0.1920	1.369	614.4	0.8848	38.77	139.5
0.64	7.68	0.1951	1.412	633.7	0.9126	39.99	143.9
0.65	7.80	0.1981	1.455	653.0	0.9404	41.21	148.3
0.66	7.92	0.2012	1.498	672.3	0.9682	42.42	152.6
0.67	8.04	0.2042	1.542	692.0	0.9966	43.67	157.1
0.68	8.16	0.2073	1.587	712.2	1.026	44.94	161.7
0.69	8.28	0.2103	1.631	732.0	1.054	46.19	166.2
0.70	8.40	0.2134	1.676	752.2	1.083	47.46	170.8

Note: Formulas fit data within 1% of full scale

Sources: Isco Open Channel Flow Measurement Handbook, 6th Edition